Electrolux PROFESSIONAL

Handling System for Hood type Pre-wash Table with Bowl Right to Left, 800mm

ITEM #

MODEL #

NAME #

SIS #

AIA #

865306 (BHHPTB08R)	Prewash table with 500x400mm bowl for hood type, r>l, 800mm

Short Form Specification

Item No.

For hood type dishwashers. Constructed in 304 AISI stainless steel. Backsplash mm300h. N. 2 square 40x40mm tubular legs on height-adjustable feet. Bowl size mm500x400x300h with overflow pipe, drain hole and plastic syphon. Basket direction: from right to left.

APPROVAL:

Main Features

- Supplied knocked-down and easy to assemble.
- Designed for 500x500 mm dishwashing racks.
- Plain undershelves and pre-rinse units available as optional accessories.

Construction

- Stainless steel feet 50 mm adjustable in height to ensure that tables drain back into the dishwasher.
- Included splashback to prevent water spatter.
- Deep anti-drip profiles completely folded with lower edge for safe and easy cleaning.
- All surfaces smooth with polished finish.
- 40x40 mm square tubular legs in AISI 304 stainless steel.
- Constructed entirely in 304 AISI stainless steel.
- To be secured to the dishwasher and fitted with one pair of legs at the other end.

Optional Accessories

- Undershelf for dishwasher table, 800mm — PNC 865351 ❑
- Floor fastening kit for 2 square legs — PNC 865386 ❑
- Single plastic drain syphon 2 " for sinks — PNC 895313 ❑

Handling System for Hood type Pre-wash Table with Bowl Right to Left, 800mm

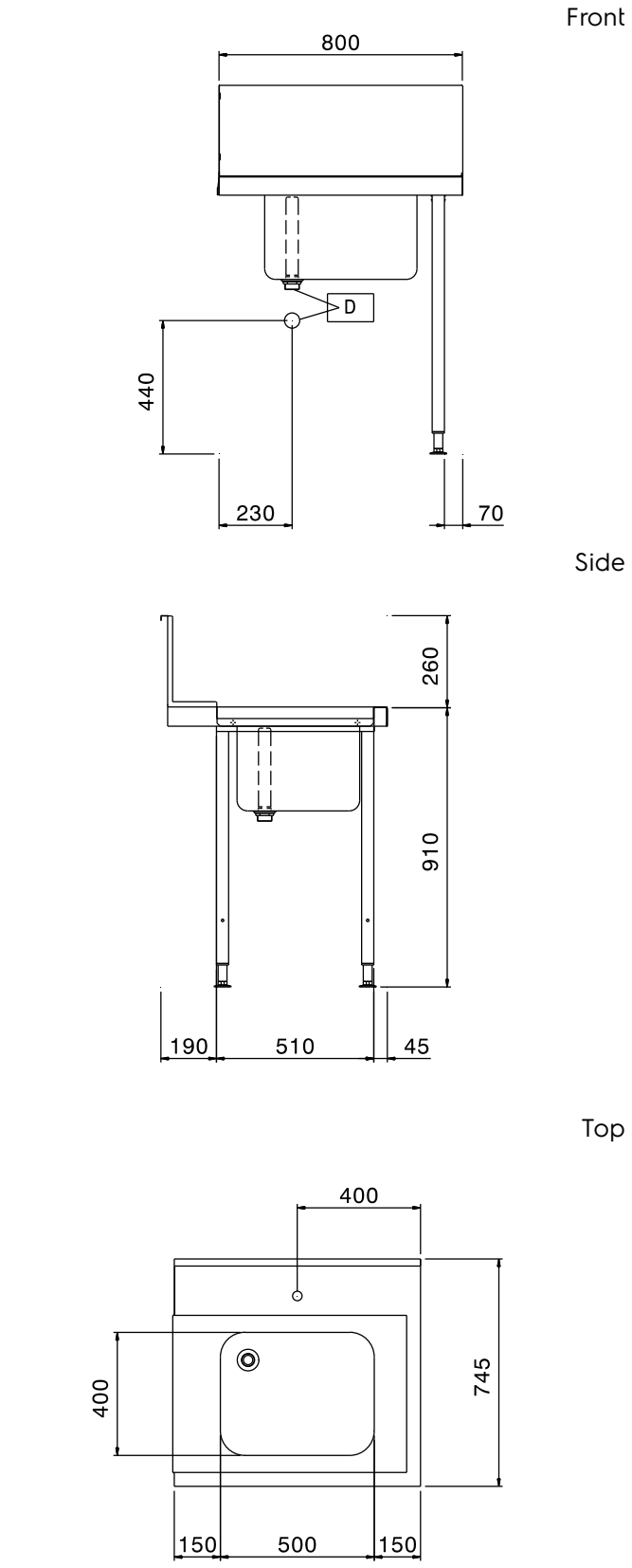

Key Information:

External dimensions, Width:	
865306 (BHHPTB08R)	800 mm
External dimensions, Depth:	745 mm
External dimensions, Height:	1170 mm
Net weight:	6 kg
Splashback Dimensions, Height:	300 mm
Basin dimensions:	500x400x300h

The company reserves the right to make modifications to the products without prior notice. All information correct at time of printing.